Midea M152H Series Heat Pump

Up to 15.2 SEER2
Cooling capacity: 18 - 60 kBtu/h

Contents:

1 NOMENCLATURE.....2
2 SPECIFICATIONS.....3
3 DIMENSIONS.....5
4 WIRING DIAGRAMS.....6

Standard Features:

- R410A chlorine-free refrigerant.
- Energy-efficient compressor.
- Internally protection against high temperature motor overload conditions.
- High quality condenser with inner-groove copper tube and aluminum fin.
- Service valves with sweat connections and easy-access gauge ports.
- Factory-installed high pressure switch and low pressure switch.
- AHRI certified and ETL listed.
- Optional drier filter as accessory.

Cabinet Features:

- Unique sound control top design.
- Compact design, easy installation and transportation.
- Powder-painted galvanized steel cabinet.
- Wire fan discharge grille.
- Steel louver coil guard

1 Nomenclature

M	O	V	A	-	24	H	N1	-	M	152	L
1	2	3	4		5	6	7		8	9	10

Legend		
No.	**Code**	**Remarks**
1	M	Brand: Midea
2	O	Outdoor unit
3	V	Discharge type: vertical discharge
4	A	Version No.: A version
5	24	Capacity: 18: 18 kBtu/h; 24: 24 kBtu/h; 30: 30 kBtu/h; 36: 36 kBtu/h; 42: 42 kBtu/h; 48: 48 kBtu/h; 60: 60 kBtu/h; 61: 60 kBtu/h;
6	H	Unit type: H: heat pump; C: cooling only
7	N1	Refrigerant type: N1: R410A
8	M	Power supply type: M: 1-Phase; X: 3- Phase
9	152	Efficiency: 152: 15.2 SEER; 134: 13.4 SEER
10	L	Compressor type: L: LG compressor; G: GMCC compressor

2 Specifications

	MOVA-18H N1-M152L	MOVA-24H N1-M152L	MOVA-30H N1-M152L	MOVA-36H N1-M152L
NOMINAL CAPACITY				
Cooling (BTU/h)	18,000	24,000	30,000	36,000
Heating (BTU/h)	18,000	24,000	30,000	36,000
ELECTRICAL DATA				
Voltage / Phase (60 Hz)	208/230 / 1	208/230 / 1	208/230 / 1	208/230 / 1
Min. / Max. Voltage	187/253	187/253	187/253	187/253
MCA	13.0	15.5	17.2	23.0
MOP	20	24	30	40
COMPRESSOR				
Type	Scroll	Scroll	Scroll	Scroll
Stage	Single	Single	Single	Single
RLA	8	8	8	8
LRA	48	52	72	75
Crankcase Heater	Yes	Yes	Yes	Yes
CONDENSER COIL				
Throttle Type	Tube & Fin	Tube & Fin	Tube & Fin	Tube & Fin
Tube Size(O.D)	3/16	3/16	3/16	3/16
FAN MOTOR				
Motor Type	ECM	ECM	ECM	ECM
Horsepower (HP)	1-1/6	1-1/6	1-1/6	1-1/3
Full Load Amps (FLA）	1.6	1.6	1.6	2.2
REFRIGERATION SYSTEM				
Liquid Valve Size (O.D.)	3/8	3/8	3/8	3/8
Suction Valve Size (O.D.)	3/4	3/4	3/4	3/4
Liquid Line Size (“O.D.)	3/8	3/8	3/8	3/8
Suction Line Size (“O.D.)	3/4	3/4	3/4	3/4
Refrigerant Charge (lbs. - oz.)	5 LBS.-4 OZ	6 LBS.-7 OZ	6 LBS.-7 OZ	7 LBS.-2 OZ
Superheat(°F)	9 °F	9 °F	9 °F	9 °F
OPERATION RANGE				
Cooling(°F)	55-115	55-115	55-115	55-115
Heating(°F)	5-86	5-86	5-86	5-86
SOUND POWER (DB)	72	74	73	73

Specifications

	MOVA-42H N1-M152L	MOVA-48H N1-M152L	MOVA-60H N1-M152L	MOVA-61H N1-M152L
NOMINAL CAPACITY				
Cooling (BTU/h)	42,000	48,000	60,000	60,000
Heating (BTU/h)	42,000	48,000	60,000	60,000
ELECTRICAL DATA				
Voltage / Phase (60 Hz)	208/230 / 1	208/230 / 1	208/230 / 1	208/230 / 1
Min. / Max. Voltage	187/253	187/253	187/253	187/253
MCA	26.9	29.6	34.6	38.9
MOP	50	50	60	60
COMPRESSOR				
Type	Scroll	Scroll	Scroll	Scroll
Stage	Single	Single	Single	Two-stage
RLA	8	8	8	29.3
LRA	112.3	94	127.1	118
Crankcase Heater	Yes	Yes	Yes	Yes
CONDENSER COIL				
Type	Tube & Fin	Tube & Fin	Tube & Fin	Tube & Fin
Tube Size(O.D)	3/16	3/16	9/32	9/32
FAN MOTOR				
Motor Type	ECM	ECM	ECM	ECM
Horsepower (HP)	1-1/3	1-1/3	1-1/3	1-1/3
Full Load Amps (FLA）	2.2	2.2	2.2	2.2
REFRIGERATION SYSTEM				
Liquid Valve Size (O.D.)	3/8	3/8	3/8	3/8
Suction Valve Size (O.D.)	7/8	7/8	7/8	7/8
Liquid Line Size (“O.D.)	3/8	3/8	3/8	3/8
Suction Line Size (“O.D.)	7/8	11/8	11/8	11/8
Refrigerant Charge (lbs. - oz.)	8 LBS.-7 OZ	8 LBS.-7 OZ	11 LBS.-5 OZ	10 LBS.-14 OZ
Superheat(°F)	9 °F	9 °F	9 °F	9 °F
OPERATION RANGE				
Cooling(°F)	55-115	55-115	55-115	55-115
Heating(°F)	5-86	5-86	5-86	5-86
SOUND POWER (DB)	76	76	78	79

3 Dimensions

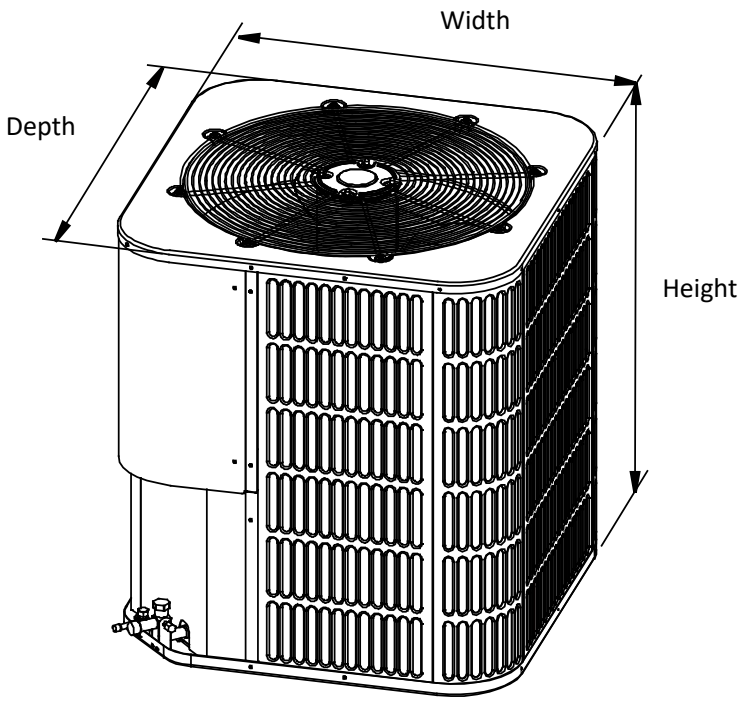

	MOVA-18H N1-M152L	MOVA-24H N1-M152L	MOVA-30H N1-M152L	MOVA-36H N1-M152L
UNIT DIMENSION AND WEIGHTS				
Height (in.)	24-15/16	24-15/16	24-15/16	33-3/16
Width (in.)	23-5/8	28	28	28
Depth (in.)	23-5/8	28	28	28
Weight (lbs.)	137	154	157	179

	MOVA-42H N1-M152L	MOVA-48H N1-M152L	MOVA-60H N1-M152L	MOVA-61H N1-M152L
UNIT DIMENSION AND WEIGHTS				
Height (in.)	33-3/16	33-3/16	33-3/16	33-3/16
Width (in.)	29-1/8	29-1/8	29-1/8	29-1/8
Depth (in.)	29-1/8	29-1/8	29-1/8	29-1/8
Weight (lbs.)	198	201	218	227

4 Wiring Diagrams

MOVA-18HN1-M152L; MOVA-24HN1-M152L; MOVA-30HN1-M152L; MOVA-36HN1-M152L; MOVA-42HN1-M152L; MOVA-48HN1-M152L; MOVA-60HN1-M152L;

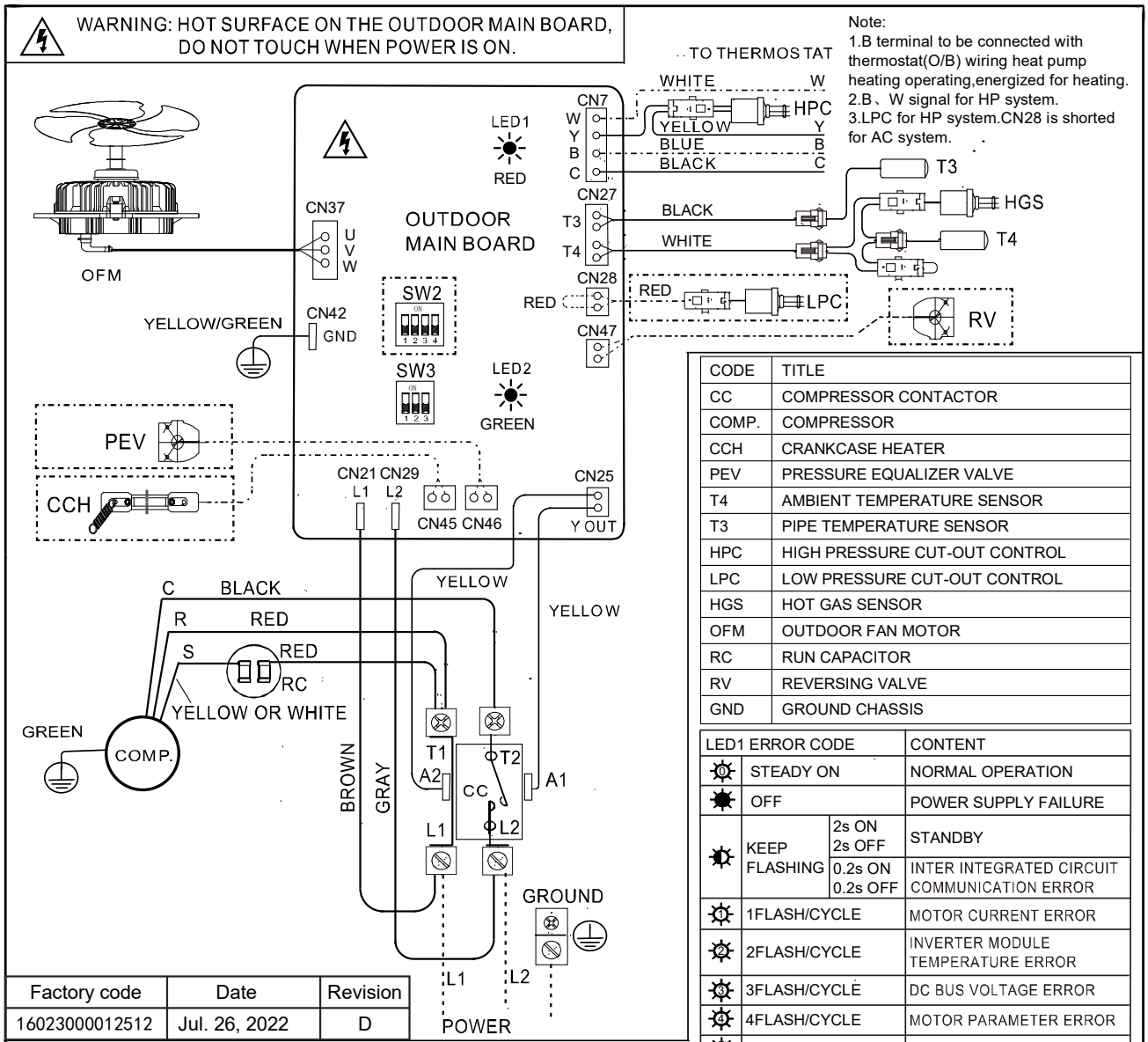

Factory code	Date	Revision
16023000012512	Jul. 26, 2022	D

CODE	TITLE
CC	COMPRESSOR CONTACTOR
COMP.	COMPRESSOR
CCH	CRANKCASE HEATER
PEV	PRESSURE EQUALIZER VALVE
T4	AMBIENT TEMPERATURE SENSOR
T3	PIPE TEMPERATURE SENSOR
HPC	HIGH PRESSURE CUT-OUT CONTROL
LPC	LOW PRESSURE CUT-OUT CONTROL
HGS	HOT GAS SENSOR
OFM	OUTDOOR FAN MOTOR
RC	RUN CAPACITOR
RV	REVERSING VALVE
GND	GROUND CHASSIS

LED1 ERROR CODE			CONTENT
	STEADY ON		NORMAL OPERATION
	OFF		POWER SUPPLY FAILURE
	KEEP FLASHING	2s ON 2s OFF	STANDBY
		0.2s ON 0.2s OFF	INTER INTEGRATED CIRCUIT COMMUNICATION ERROR
	1FLASH/CYCLE		MOTOR CURRENT ERROR
	2FLASH/CYCLE		INVERTER MODULE TEMPERATURE ERROR
	3FLASH/CYCLE		DC BUS VOLTAGE ERROR
	4FLASH/CYCLE		MOTOR PARAMETER ERROR
	5FLASH/CYCLE		MOTOR STARTUP FAILURE
	6FLASH/CYCLE		PHASE SEQUENCE ERROR

LED2 ERROR CODE	CONTENT
STEADY ON	NORMAL OPERATION
OFF	POWER SUPPLY FAILURE
1FLASH/CYCLE	T3 SENSOR FAILURE
2FLASH/CYCLE	T4 SENSOR FAILURE
3FLASH/CYCLE	LPC OPEN
5FLASH/CYCLE	OFM FAILURE
6FLASH/CYCLE	NO MACHINE TYPE

SET CAPACITY	MODEL	18K 1.5TON	24K 2TON	30K 2.5TON	36K 3TON	42K 3.5TON	48K 4TON	60K 5TON
SW2	13.4AC	011,0	011,0	001,0	010,1	/	/	/
	15.2AC	011,0	001,0	001,0	010,1	011,1	100,1	100,1
	15.2HP	011,0	001,0	001,0	010,1	011,1	100,1	100,1

0/1 DEFINITION OF EACH DIAL CODE SWITCH	
	means 0=OFF
	means 1=ON

SW2 - 4 definition	
	100W FAN MOTOR
	200W FAN MOTOR

CODE	TITLE
13.4AC	13.4 SEER COOL ONLY SYSTEM
15.2AC	15.2 SEER COOL ONLY SYSTEM
15.2HP	15.2 SEER HEAT PUMP SYSTEM

* THE FACTORY DEFAULT

SW3	SW3 -1	ON	MANUAL DEFROST
		OFF	AUTOMATIC DEFROST *
	SW3 -2	ON	RESERVED
		OFF	NORMAL DEFROST *
	SW3 -3	ON	DEFROSTING CYCLE:30MIN
		OFF	DEFROSTING CYCLE:60MIN *

WARNING
- CABINET MUST BE PERMANENTLY GROUNDED AND ALL WIRING TO CONFORM TO I.E.C,N.E.C,C.L.C,AND LOCAL CODES AS APPLICABLE REPLACEMENT WIRE MUST BE THE SAME GAUGE AND INSULATION TYPE AS ORIGINAL WIRE.

LINE VOLTAGE
- FACTORY STANDARD
- FIELD INSTALLED
- FACTORY OPTIONAL

LOW VOLTAGE
- FACTORY STANDARD
- FIELD INSTALLED
- FACTORY OPTIONAL

USE COPPER CONDUCTORS ONLY

THE WIRING DIAGRAM SHOWN IS FOR REFERENCE ONLY.IT MAYBE DIFFERENT FROM THE ACTUAL PRODUCT.

Wiring Diagrams

MOVA-61HN1-M152L;

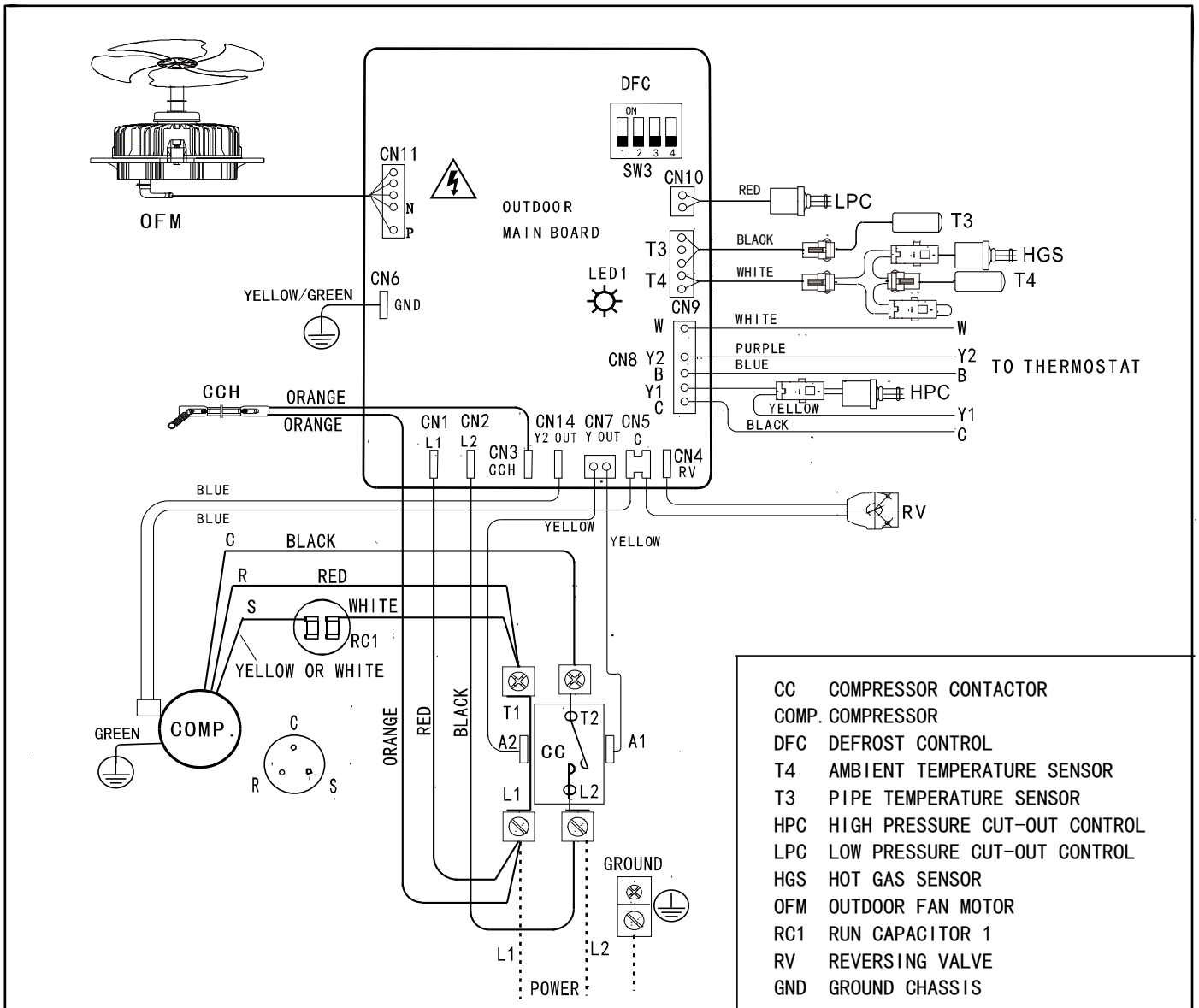

CC	COMPRESSOR CONTACTOR
COMP.	COMPRESSOR
DFC	DEFROST CONTROL
T4	AMBIENT TEMPERATURE SENSOR
T3	PIPE TEMPERATURE SENSOR
HPC	HIGH PRESSURE CUT-OUT CONTROL
LPC	LOW PRESSURE CUT-OUT CONTROL
HGS	HOT GAS SENSOR
OFM	OUTDOOR FAN MOTOR
RC1	RUN CAPACITOR 1
RV	REVERSING VALVE
GND	GROUND CHASSIS

*THE FACTORY DEFAULT

SW3

SW3-1	ON	MANUAL DEFROST
	OFF	AUTOMATIC DEFROST *
SW3-2	ON	RESERVED
	OFF	NORMAL DEFROST *
SW3-3	ON	DEFROSTING CYCLE:30MIN
	OFF	DEFROSTING CYCLE:60MIN *
SW3-4	ON	RESERVED
	OFF	NORMAL *

	STEADY ON	NORMAL OPERATION
	OFF	DFC FAILURE
1	1FLASH	T3 SENSOR FAILURE
2	2FLASH	T4 SENSOR FAILURE
3	3FLASH	LPC OPEN
5	5FLASH	OFM FAILURE

LINE VOLTAGE
- FACTORY STANDARD
- FIELD INSTALLED
- FACTORY OPTIONAL

LOW VOLTAGE
- FACTORY STANDARD
- FIELD INSTALLED
- FACTORY OPTIONAL

USE COPPER CONDUCTORS ONLY

WARNING
- CABINET MUST BE PERMANENTLY GROUNDED AND ALL WIRING TO CONFORM TO I.E.C, N.E.C, C.L.C, AND LOCAL CODES AS APPLICABLE REPLACEMENT WIRE MUST BE THE SAME GAUGE AND INSULATION TYPE AS ORIGINAL WIRE.

Ver. 2022-09

Midea Building Technologies Division
Midea Group

Add.: Midea Headquarters Building, 6 Midea Avenue, Shunde, Foshan, Guangdong, China

Postal code: 528311

mbt.midea.com / global.midea.com / tsp.midea.com

Note: Product specifications change from time to time as product improvements and developments are released and may vary from those in this document.