INSTALLATION INSTRUCTIONS

PACKAGE HEAT PUMP & AIR CONDITIONING
FEATURING R-410A
13.4 SEER2 SERIES - (2-5Tons)

Thank you very much for purchasing our product,
Before using your unit , please read this manual carefully and keep it for future reference.
The figure shown in this manual is for reference only and may be slightly different from the actual product.

RECOGNIZE THIS SYMBOL AS AN INDICATION OF IMPORTANT SAFETY INFORMATION

⚠ WARNING

These instructions are intended as an aid to qualified, licensed service personnel for proper installation, adjustment and operation of this unit. Read these instructions thoroughly before attempting installation or operation. Failure to follow these instructions may result in improper installation, adjustment, service or maintenance possibly resulting in fire, electrical shock, property damage, personal injury or death.

CONTENTS

1 SAFETY

- 1.1 Inspection 02
- 1.2 Limitations 02

2 INSTALLATION

- 2.1 Pre-Installation 02
- 2.2 Rigging and Handing 02
- 2.3 Unit Dimensions 03
- 2.4 Roof Curb 08
- 2.5 Location Restrictions 09

3 DUCTWORK 10

4 CONDENSATE DRAIN CONNECTION

- 4.1 Install Drain Pipe 11
- 4.2 Removal and Cleaning The Drain Pan 11

5 FILTERS 11

6 ELECTRICAL WIRING

- 6.1 Power Wiring 11
- 6.2 Grounding 12
- 6.3 Control Wiring 13

7 AIRFLOW PERFORMANCE

- 7.1 Airflow Performance Data 14

8 SYSTEM OPERATION

- 8.1 Compressor Crankcase Heater 15
- 8.2 Protection 15
- 8.3 Defrost Mode 15
- 8.4 Thermostat Signals 16

9 OPERATION CHECK-UP 16

10 TROUBLE SHOOTING 16

This document is customer property and is to remain with this unit.

These instructions do not cover all the different variations of systems nor does it provide for every possible contingency to be met in connection with installation.

All phases of this installation must comply with NATION, STATE AND LOCAL CODES. If additional information is required please contact your local distributor.

1 SAFETY

When you see the symbols below on labels or in the manual, be alert to the potential or immediate hazards of personal injury, property and/or product damage. It is the owner's or installer's responsibility to comply with all safety instructions and information accompanying these symbols.

⚠ **WARNING:**This is a safety alert symbol indicating a potential hazardous situation, which could result in personal injury, property and/or product damage or death.

⚠ **CAUTION:**This is a safety alert symbol indicating a potential hazardous situation, which could result in moderate personal injury, and/or property and product damage.

⚠ WARNING

These instructions are intended as an aid to qualified, licensed service personnel for proper installation, adjustment and operation of this unit. Read these instructions thoroughly before attempting installation or operation.

Failure to follow these instructions may result in improper installation, adjustment, service or maintenance possibly resulting in fire, electrical shock, property damage, personal injury or death.

⚠ WARNING

The manufacturer's warranty does not cover any damage or defect to the heat pump caused by the attachment or use of any components, accessories or devices (other than those authorized by the manufacturer) into, onto or in conjunction with the heat pump. You should be aware that the use of unauthorized components, accessories or devices may adversely affect the operation of the heat pump and may also endanger life and property. The manufacturer disclaimer any responsibility for such loss or injury resulting from the use of such unauthorized components, accessories or devices.

⚠ WARNING

Disconnect all power to the unit before starting maintenance. Failure to do so can result in severe electrical shock or death.

⚠ WARNING

Do not, under any circumstances, connect return ductwork to any other heat producing device such as a fireplace insert, stove, etc. Unauthorized use of such devices may result in fire, carbon monoxide poisoning, explosion, property damage, severe personal injury or death.

⚠ WARNING

The unit must be permanently grounded. A grounding lug is provided. Failure to ground this unit can result in fire or electrical shock causing property damage, severe personal injury or death.

⚠ WARNING

Only electric heater kits supplied by this manufacturer as described in this publication have been designed, tested, and evaluated by a nationally recognized safety testing agency for use with this unit. Use of any other manufactured electric heaters installed within this unit may cause hazardous conditions resulting in property damage, fire, body injury or death.

⚠ WARNING

Proposition 65: This appliance contains fiberglass insulation. Respirable particles of fiberglass are known to the state of California to cause cancer.

⚠ CAUTION

Only use this unit in well-ventilated spaces and ensure that there are no obstructions that could impede the airflow into and out of the unit.
Do not use this unit in the following locations:

- Locations with mineral oil.
- Locations with saline atmospheres, such as seaside locations.
- Locations with sulphurous atmospheres, such as near natural hot springs.
- Where high voltage electricity is present, such as in certain industrial locations.
- On vehicles or vessels, such as trucks or ferry boats.
- Where exposure to oily or very humid air may occur, such as kitchens.
- In proximity to sources of electromagnetic radiation, such as high-frequency transmitters or other high strength radiation devices.

1.1 Inspection

As soon as unit is received, it should be inspected and noted for possible shipping damage during transportation. It is carrier's responsibility to cover the cost of shipping damage. Manufacturer or distributor will not accept the claims from dealer for any transportation damage.

1.2 Limitations

Refer to Fig. 2-3, 2-4,2-6,2-7 for unit physical data and to Table 6-1,6-2 for electrical data.

If components are to be added to a unit they must meet local codes, they are to be installed at the dealer's and /or the customer's expense.

Size of unit for proposed installation should be based on heat loss / heat gain calculations made in accordance with industry recognized procedures identified by the Air conditioning contractors of America.

2 INSTALLATION

2.1 Pre-Installation

Before installation, carefully check the following:

1. Unit should be installed in accordance with national and local safety codes, including but not limit to ANSI/NFPS No. 70 or Canadian Electrical Code Part 1, C22.1, local plumbing and wastewater codes and any other applicable codes.
2. For rooftop installation, be sure the structure has enough strength to support the weight of unit. Unit should be installed on roof curb and leveled.
3. For ground level installation, a level slab should be used.
4. Condenser airflow should not be restricted.
5. On applications when a roof curb is used, the unit must be positioned on the curb so the front of the unit is tight against the curb.

2.2 Rigging and Handing

Exercise care when moving the unit. Do not remove any packaging until the unit is near the place of installation. Rig the unit by attaching chain or cable slings to the lifting holes provided in the base rails. Spreader bars, whose length exceeds the largest dimension across the unit, MUST be used across the top of the unit.

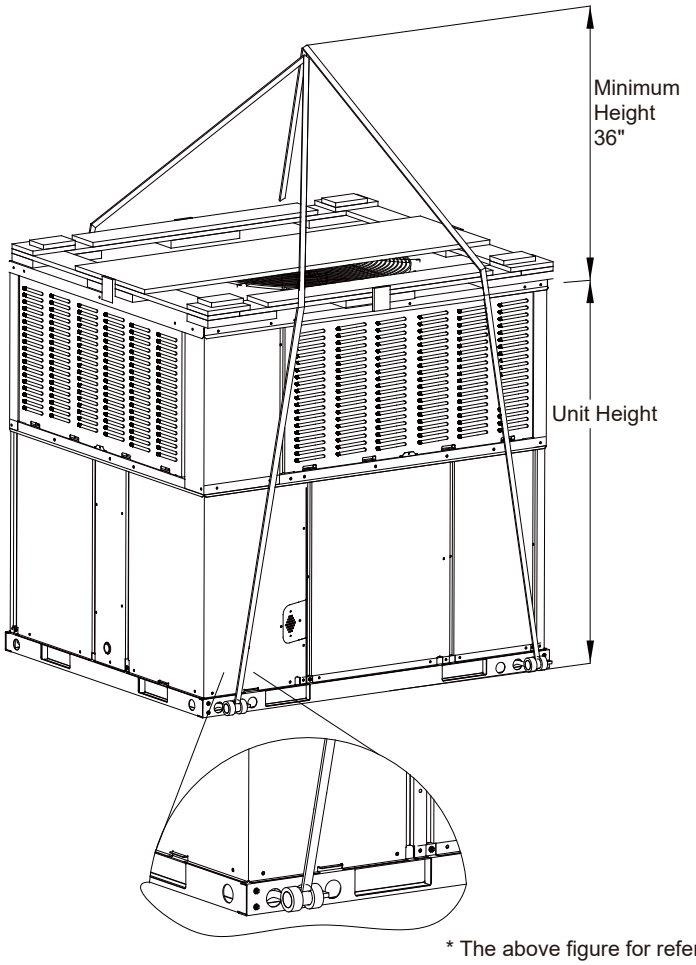

Fig. 2-1 Hoisting Diagram

* The above figure for reference purpose only.

⚠ CAUTION

Before lifting, make sure the unit weight is distributed equally on the rigging cables so it will lift evenly.

Units may be moved or lifted with a forklift. Slotted openings in the base rails are provided for this purpose.

⚠ CAUTION

All panels must be secured in place when the unit is lifted.
The condenser coils should be protected form rigging cable damage with plywood or other suitable material.

⚠ WARNING

Check the electric wire, water and gas pipeline layout inside the wall, floor and ceiling before installation. Do not implement drilling unless confirm safety with the user, especially for the hidden power wire. An electroprobe can be used to test whether a wire is passing by at the drilling location, to prevent physical injury or death caused by insulation broken cords.

⚠ WARNING

Check the power supply before installation.
Ensure that the power supply must be reliably grounded following local, state and National Electrical Codes. If not, for example, if the ground wire is detected charged, installation is prohibited before it is rectified. Otherwise, there is a risk of fire and electric shock, causing physical injury or death.

2.3 Unit Dimensions

Component Location-24k&36k

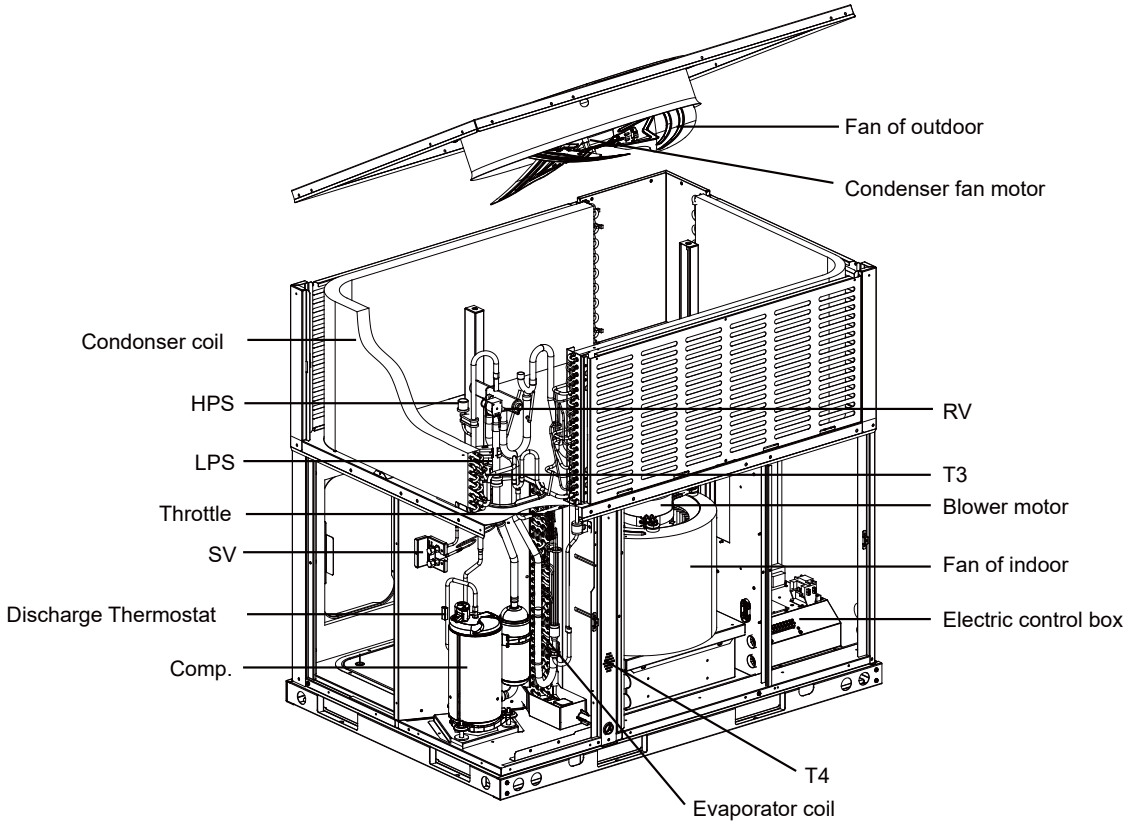

Fig. 2-2 Component Location

* The above figure for reference purpose only.

Unit Dimensions-24k&36k

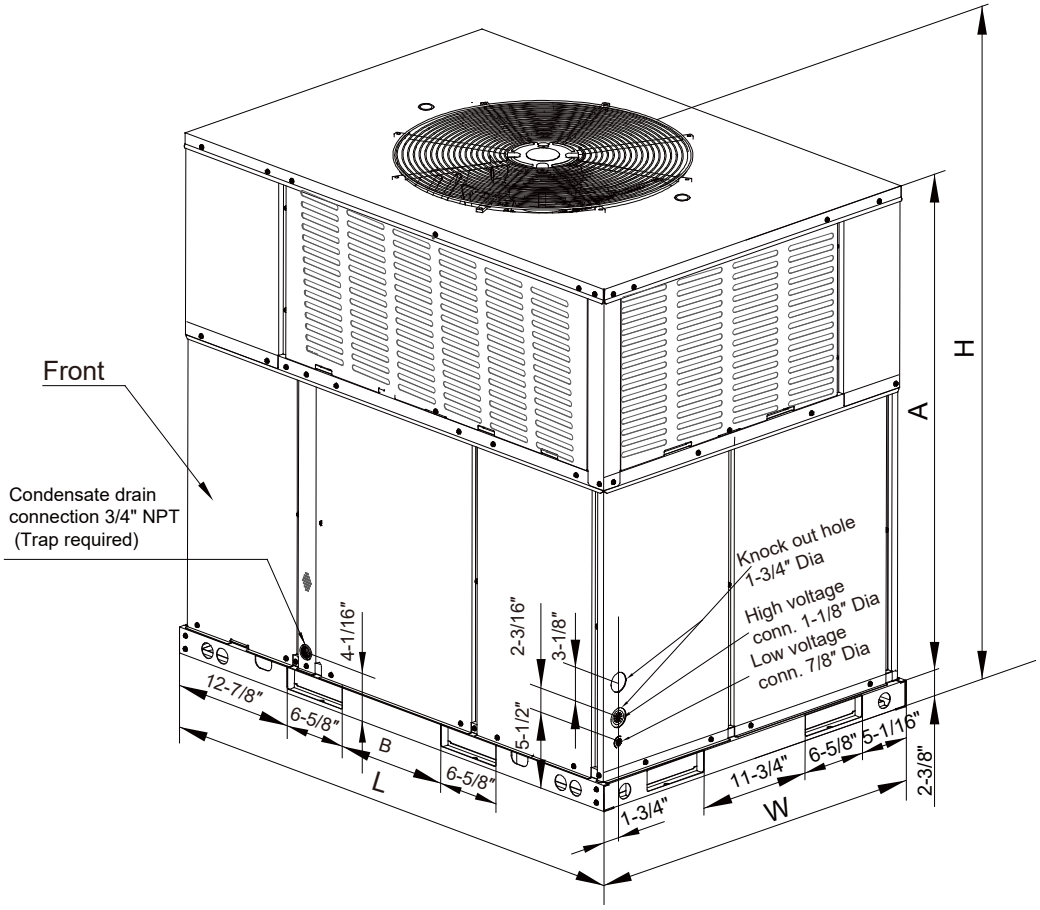

Fig. 2-3 Unit Dimensions

* The above figure for reference purpose only.

Model size	Dimensions				
Heat Pump	"L" in.[mm]	"W" in.[mm]	"H" in.[mm]	"A" in.[mm]	"B" in.[mm]
24/36	50-11/16 [1287]	35-1/16 [891]	46-13/16 [1190]	44-1/16 [1120]	11-3/4 [298]

Table 2-1 Unit Dimensions

Dimensions Back and Bottom-24K&36K

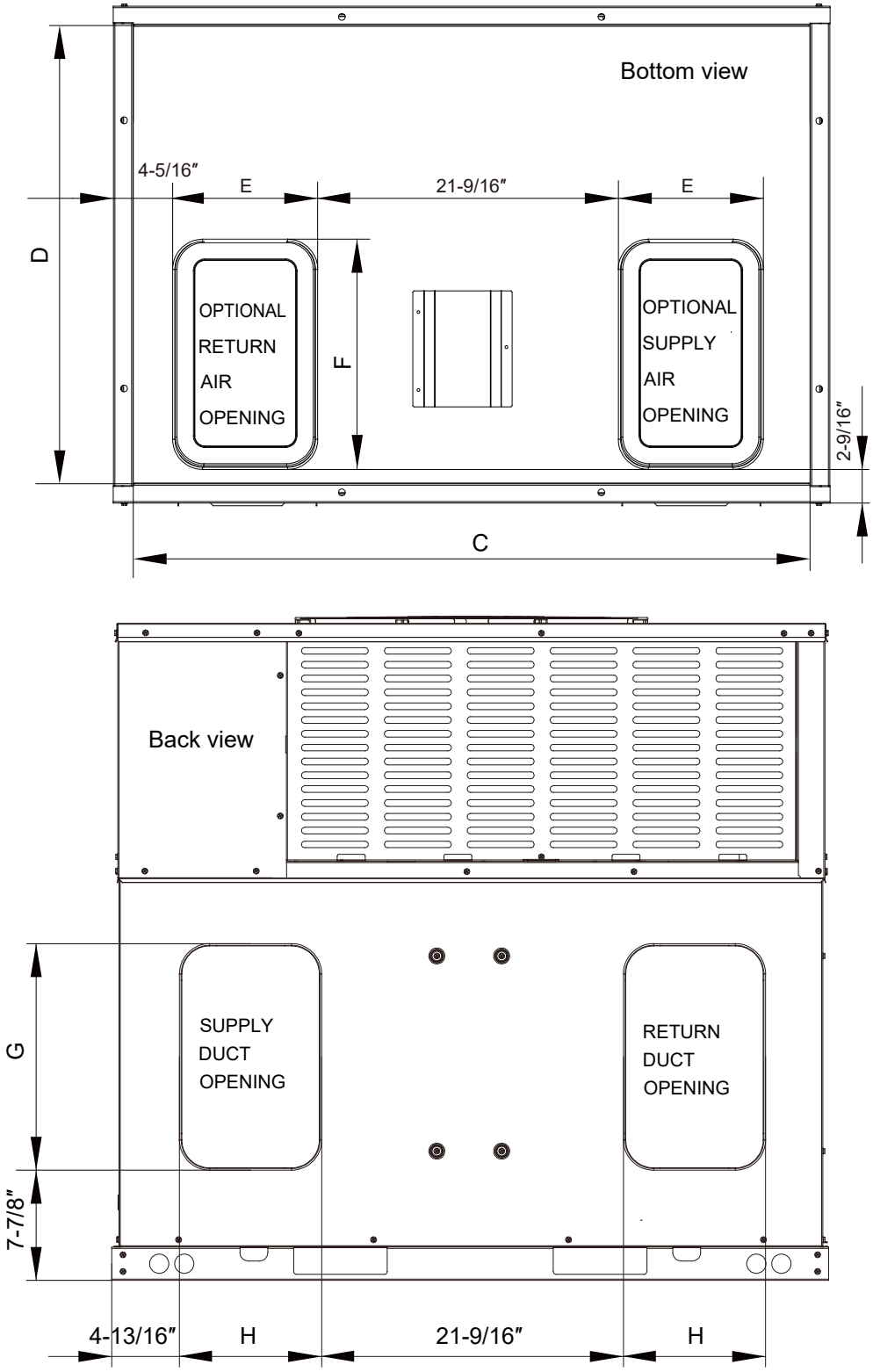

Fig. 2-4 Dimensions Back and Bottom

* The above figure for reference purpose only.

Model size	Dimensions					
Heat Pump	"C" in.[mm]	"D" in.[mm]	"E" in.[mm]	"F" in.[mm]	"G" in.[mm]	"H" in.[mm]
24/36	47-13/16 [1215]	32-1/4 [820]	9-15/16 [252]	15-7/8 [403]	15-3/4 [400]	9-3/4 [249]

Table 2-2 Unit Dimensions

Component Location-48K&60K

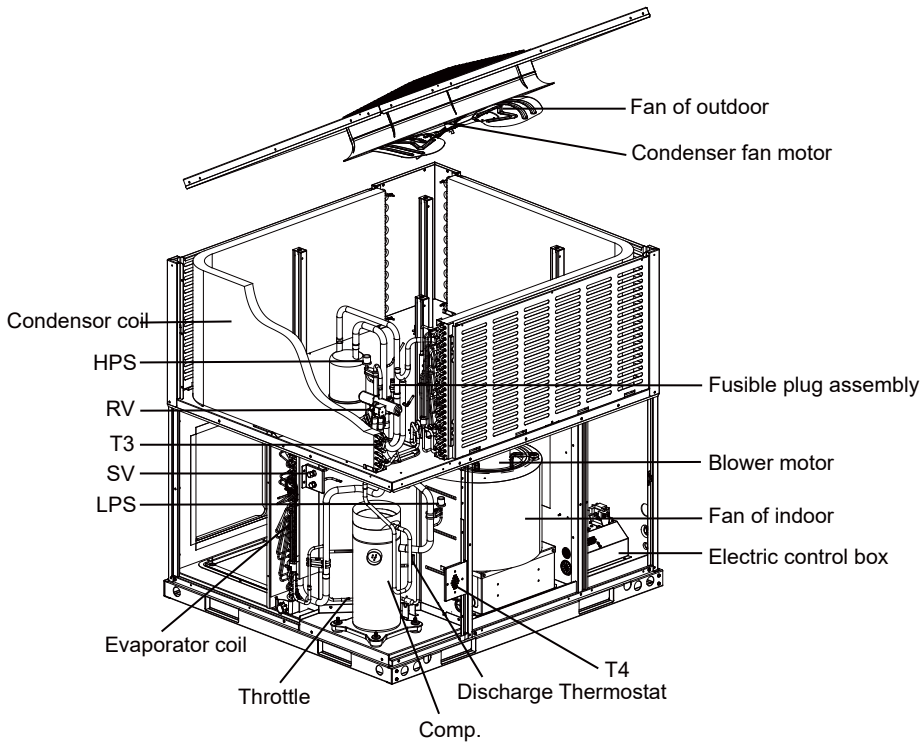

Fig. 2-5 Component Location

* The above figure for reference purpose only.

Unit Dimensions-48K&60K

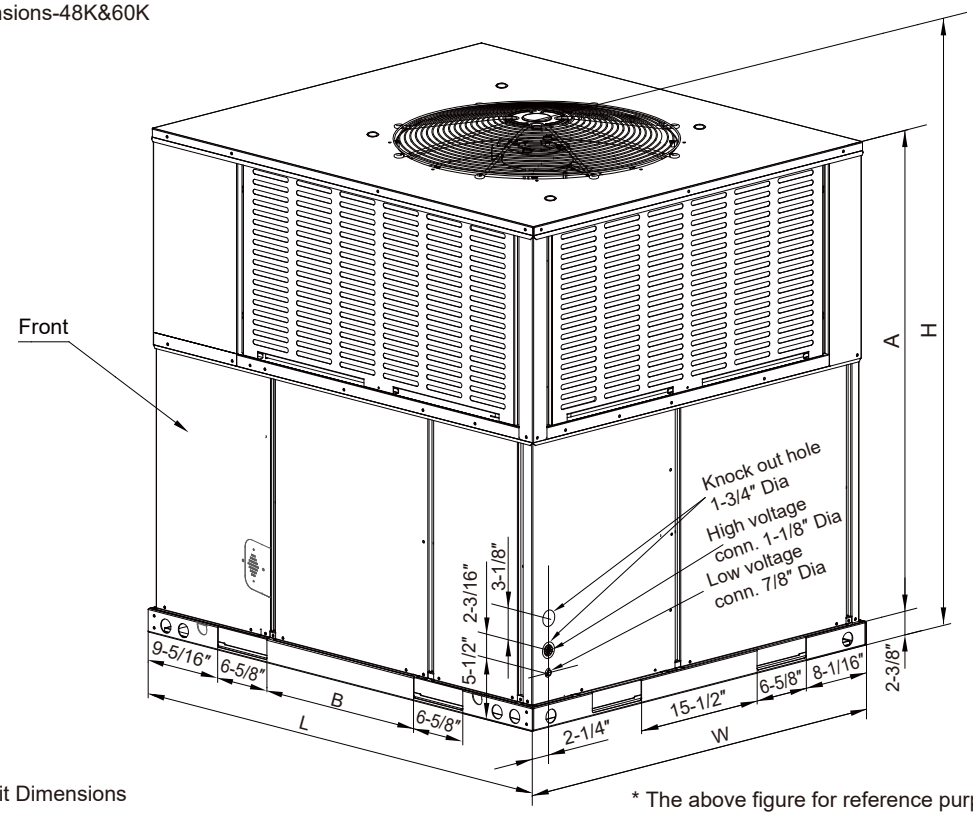

Fig. 2-6 Unit Dimensions

* The above figure for reference purpose only.

Model size	Dimensions				
Heat Pump	"L" in.[mm]	"W" in.[mm]	"H" in.[mm]	"A" in.[mm]	"B" in.[mm]
48/60	51-9/16 [1310]	44-13/16 [1140]	51-7/16 [1306]	47-5/16 [1202]	19-11/16 [500]

Table 2-3 Unit Dimensions

Dimensions Back and Bottom-48K&60k

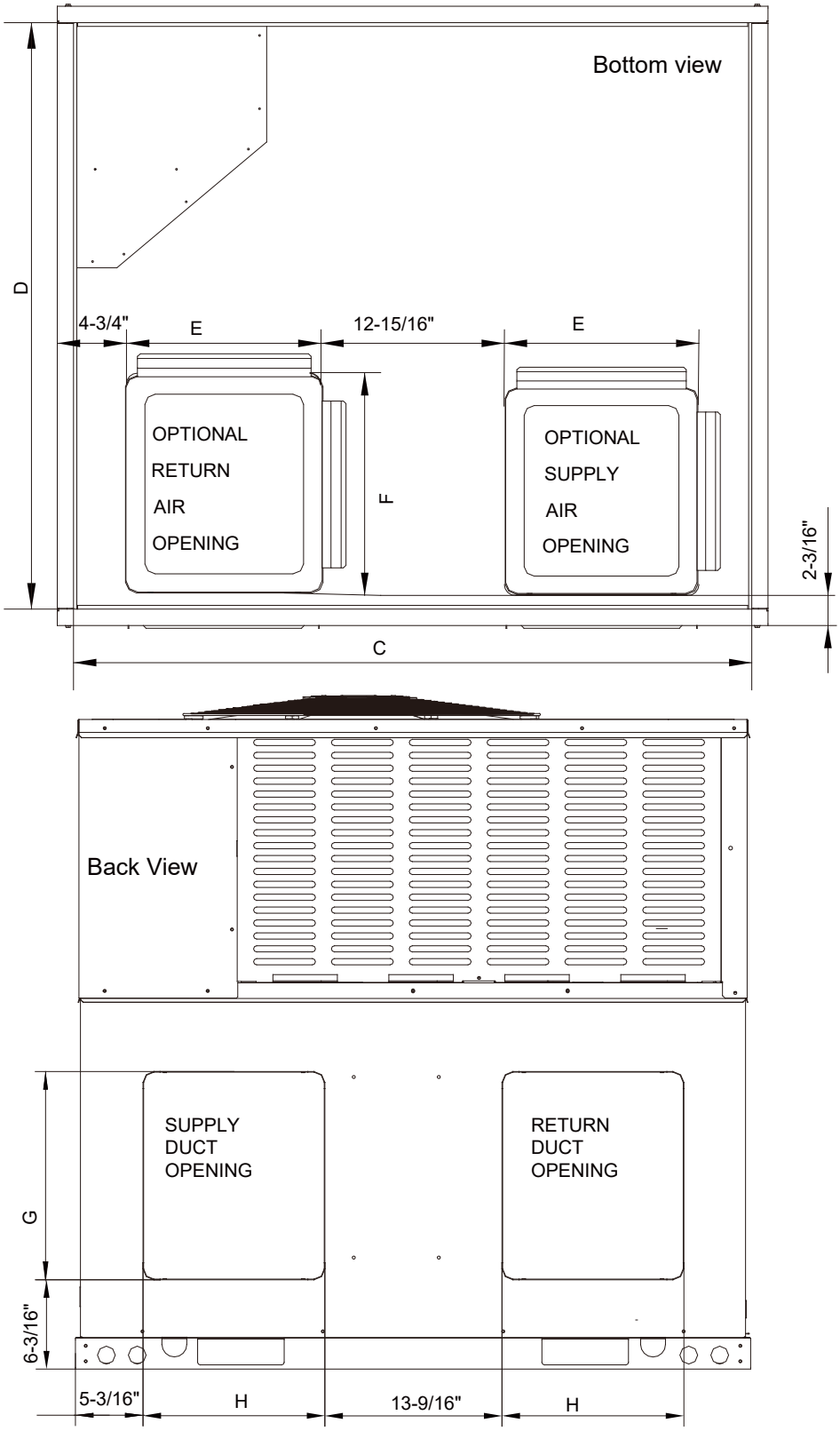

Fig. 2-7 Dimensions Back and Bottom

* The above figure for reference purpose only.

Model size	Dimensions					
Heat Pump	"C" in.[mm]	"D" in.[mm]	"E" in.[mm]	"F" in.[mm]	"G" in.[mm]	"H" in.[mm]
48/60	49-1/4 [1250]	42-1/2 [1080]	14-1/8 [358]	16-1/8 [409]	15-7/8 [403]	13-7/8 [352]

Table 2-4 Unit Dimensions

NOTE

For units applied with a roof curb, the minimum clearance may be reduced from 1 inch to 1/2 inch between combustible roof curb material and this supply air duct.

2.4 Roof Curb

On applications when a roof curb is used,the unit must be positioned on the curb so the front of the unit is tight against the curb.(See Fig.2-8 ROOF CURB DIMENSIO)

NOTE

For units applied with a roof curb, the minimum clearance may be reduced from 1 inch to 1/2 inch between combustible roof curb material and this supply air duct.

Roof Curb Dimension

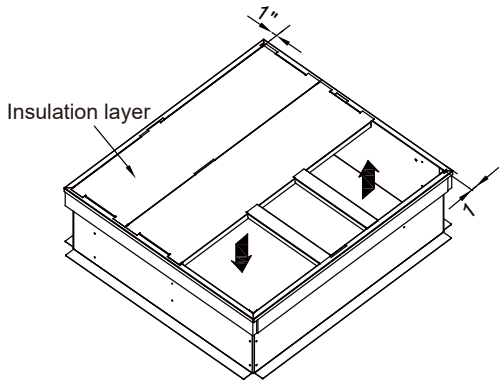

Supply and return air (including duct support rails) shown are typicalfor bottom duct applications.For location of horizontal duct applications (on back of unit),refer to unit dimension details.

Fig. 2-8

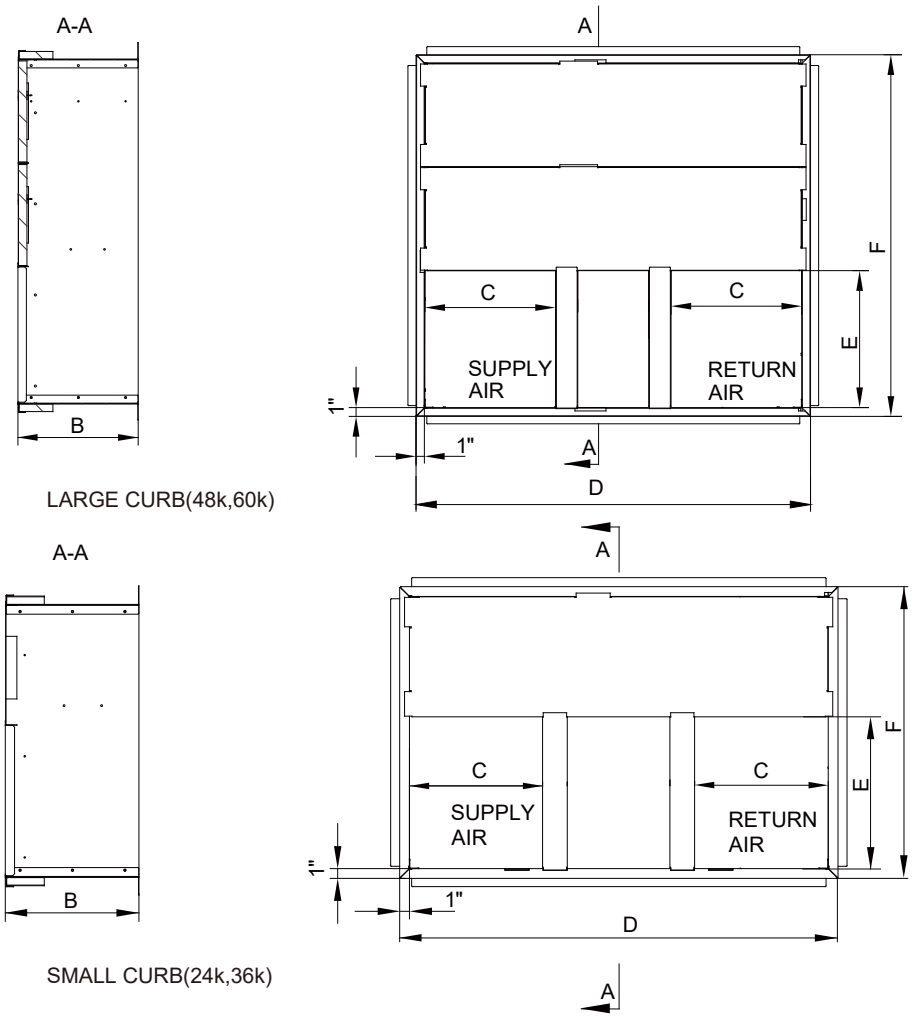

Fig. 2-9 Roof Curb Details

* The above figure for reference purpose only.

CURB	Dimensions(Inches)				
	"B" in.[mm]	"C" in.[mm]	"D" in.[mm]	"E" in.[mm]	"F" in.[mm]
LARGE	14-1/4 [362]	15-1/4 [387]	46-1/16 [1170]	16 [406]	42-3/16 [1070]
SMALL	14-1/4 [362]	14 [356]	46-1/16 [1170]	16 [406]	30-5/8 [778]

Table 2-5 Unit Dimensions

NOTE

All panels must be secured in place when the unit is lifted. The condenser coils should be protected form rigging cable damage with plywood or other suitable material.

2.5 Location Restrictions

Ensure the top discharge area is unrestricted for at least 60 inches above the unit.

Do not locate outdoor unit near bedrooms since normal operational sounds may be objectionable.

Position unit to allow adequate space for unobstructed airflow, wiring, refrigerant lines, and serviceability.

Allow a minimum of 12 in. clearance on one side of access panel to a wall and a minimum of 24 in. on the adjacent side of access panel.

Maintain a distance of 24 in. between units.

Position unit where water, snow, or ice from roof or overhang cannot fall directly on unit.(See Fig.2-11 and Fig.2-12.)

CAUTION:

Cold climate considerations (heat pump only)

NOTE

Precautions must be taken for units being installed in areas where snow accumulation and prolonged below-freezing temperatures occur.

- Units should be elevated 3-12 inches above the pad or rooftop, depending on local weather. This additional height will allow drainage of snow and ice melted durlng defrost cycle prior to its refreezlng. Ensure that drain holes in unit base pan are not obstructed, preventing drainage of defrost water (See Fig.2-13).
- If possible, avoid locations that are likely to accumulate snow drifts.
  If not possible, a snow drift barrier should be installed around the unit to prevent a build-up of snow on the sides of the unit.

Note: Make sure that Condensate Drain side is not higher than the other side (Fig.2-10).

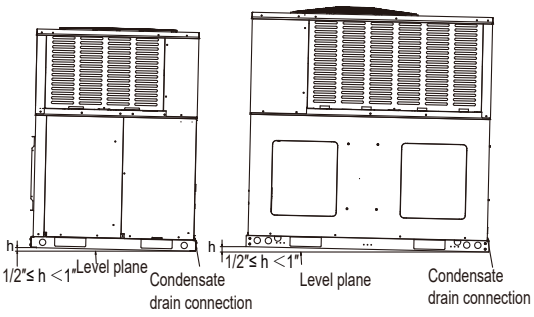

* The above figure for reference purpose only.

Fig. 2-10 Slab installation

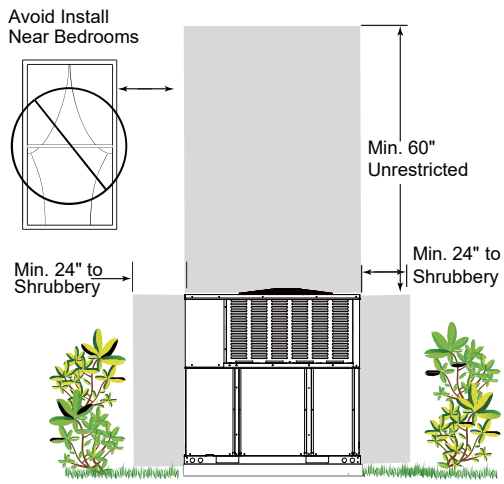

Fig. 2-11

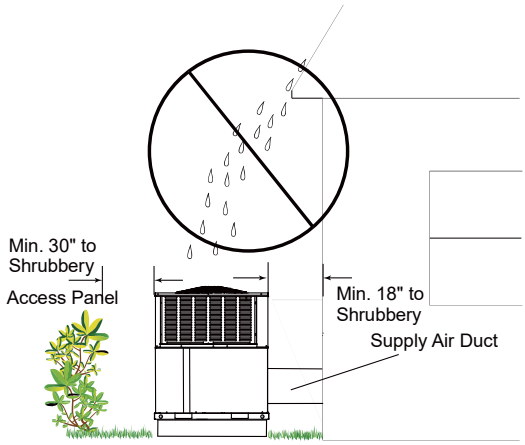

Fig. 2-12

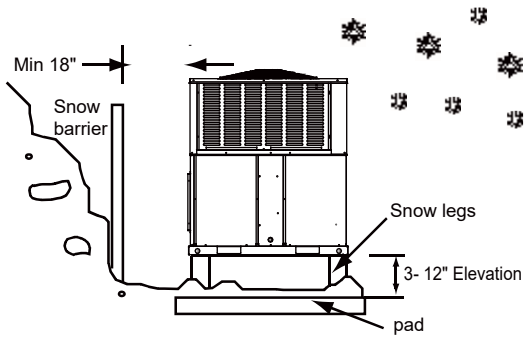

Fig. 2-13

3 DUCTWORK

Ductwork should be sized and installed by the installing contractor in accordance with the Manual D from the Air Conditioning Contractors of America, and all national, state and local codes.

NOTE

On ductwork exposed to outside air space, use at least 2" of insulation and a vapor barrier. Flexible joint may be used to reduce noise.

A closed return duct system shall be used. This shall not preclude use of economizers or ventilation air intake. Flexible joints may be used in the supply and return duct work to minimize the transmission of noise.

⚠ CAUTION

When fastening duct work to the side duct flanges on the unit, insert the screws through the duct flanges only. DO NOT insert the screws through the casing. Outdoor duct work must be insulated and waterproofed.

NOTE

Be sure to note supply and return openings. Refer to Fig. 3-2 for information concerning supply and return air duct openings.

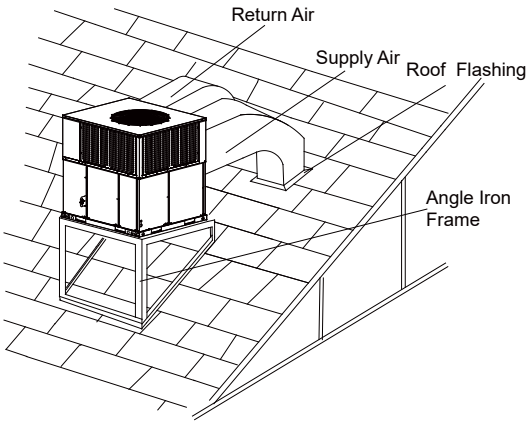

Fig. 3-1 Rooftop Installation—Frame Mounting

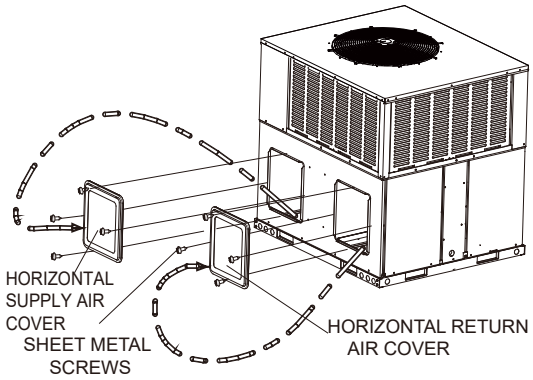

Fig. 3-2

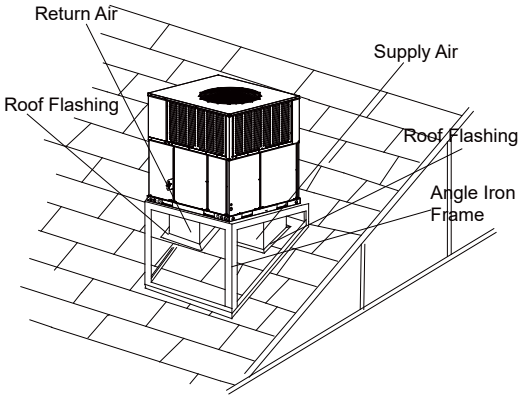

Fig. 3-3 Typical Rooftop Down Airflow Application with Frame

After the unit is installed, there should be no open passages through the supporting structure that would permit flame or hot gases from a fire originating in the space below the supporting structure to travel to the space above that structure.

NOTE

A unit with electric heaters with an inlet or outlet duct that penetrates the building structure supporting the unit shall be provided with a mounting base of noncombustible material so designed that, after the unit is installed, there will be no open passages through the supporting structure that would permit flame or hot gases from a fire originating in the space below the supporting structure to travel to the space above that structure. If the unit is intended to be installed on a supporting structure of combustible material, the base shall be so designed that the required clearance will be maintained between the supporting unit mounting base, and shall extend not less than 76 mm (3 in.) below the upper surface of the supporting structure, except that, in a unit designed for use only in a mobile home, the distance shall be not less than 19 mm (3/4 in.).

4 CONDENSATE DRAIN CONNECTION

Consult local codes for special requirements.
To provide extra protection from water damage, install an additional drain pan, provided by installer, under the entire unit with a separate drain line.
Manufacturer will not be responsible for any damages due to the failure to follow these requirements.

4.1 Install Drain Pipe

1. Use the provided female NPT threaded fitting for outside connection and make sure that drain holes are not blocked.
2. Insulation may be needed for drain line to prevent sweating.
3. Use a sealing compound on male pipe threads. Install the condensate drain line (NPT) to spill into an open drain.
4. Ensure a trap is included in the condensate drain line.
5. Make sure that the outlet of the trap is at least 1 in. (25mm) lower than the drain pan condensate connection to prevent the pan from overflowing (See Fig. 4-1).
6. Unit must be slightly inclined toward drain connection.(See Fig. 2-10).

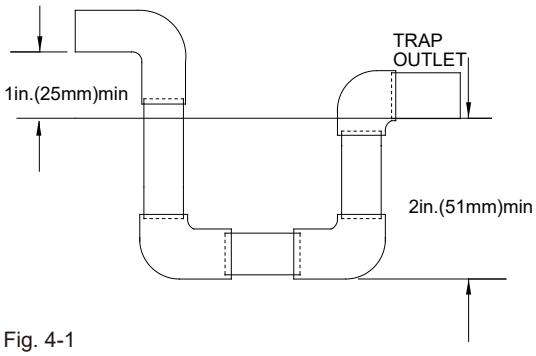

Fig. 4-1

4.2 Removal and Clean The Drain Pan

See above Figure.4-1 B, disconnect the Connective Tube and Drain Commutator, screw off the two fixed screws of Drain Pan, and then along with the rail pull out the Drain Pan and Connective Tube from the bottom of evaporator. Using a wet cloth or water to wash out the drain pan carefully.

5 FILTERS

Units are shipped without a filter or filter racks. It is the responsibility of the installer to secure a filter in the return air ductwork or install a filter/frame Kit.

Filter must always be used and must be kept clean.

When filter become dirt laden, insufficient air will be delivered by the blower, decreasing your units efficiency and increasing operation costs and wear-and tear on the unit and controls.

Filters should be checked monthly; this is especially important since this unit is used for both heating and cooling.

6 ELECTRICAL WIRING

Field wiring must comply with the National Electric Code (NEC) or Canadian Electrical Code (CEC) and any applicable local ordinance.

⚠ WARNING

Disconnect all power to unit before installing or servicing. More than one disconnect switch may be required to de-energize the equipment. Hazardous voltage can cause severe personal injury or death.

6.1 Power Wiring

1. Proper electrical power should be available at unit. Voltage tolerance should not be over 10% from rating voltage.

2. If any of the wire must be replaced, replacement wire must be the same type as shown in nameplate, wiring diagram and electrical data sheet.

3. Install a branch circuit disconnect of adequate size to handle starting current, located within sight of, and readily accessible to the unit.

4. ELECTRIC HEATER - If the Electric Heater is installed, unit may be equipped with 30~60A. circuit breakers or fuse. These breaker(s) protect the internal wiring in the event of a short circuit and serve as a disconnect. Circuit breakers installed within the unit do not provide over-current protection of the supply wiring and therefore may be sized larger than the branch circuit protection.

• Supply circuit power wiring must be 221 °F minimum copper conductors only. See Electrical Data in this section for ampacity, wire size and circuit protector requirements. Supply circuit protective devices may be either fuses or “HACR” type circuit breakers.

• An 1-3/8” knockouts inside cabinet is provided for connection of power wiring to electric heater.

• Power wiring is connected to the power terminal block in unit electric cabinet.

See Electrical Heater Installation Instruction for details.

6.2 Grounding

⚠ WARNING

The unit must be permanently grounded. Failure to do so can result in electrical shock causing personal injury or death.

• Grounding may be accomplished by grounding metal conduit when installed in accordance with electrical codes to the unit cabinet.

• Grounding may also be accomplished by attaching ground wire(s) to ground lug(s) provided in the unit wiring compartment.

6.3 Control Wiring

IMPORTANT: Class 2 low voltage control wiring SHOULD NOT be run in conduit with main power wiring and must be separated from power wiring, unless class 1 wire of proper voltage rating is used.

• Low voltage control wiring should be 18 AWG color-coded. For lengths longer than 50 ft, 16 AWG wire should be used.

• Two 7/8” holes can be used for control wires going into the unit, one on left side and one at the bottom.

• Make sure, after installation, separation of control wiring and power wiring has been maintained.

Thermostat should be mounted on an inside wall about 58" from floor and will not be affected by unconditioned air, sun and/or heat exposure. Follow the instruction carefully because there are many wiring requirements.

See Fig. 6-1 ~ 2, Table 6-1

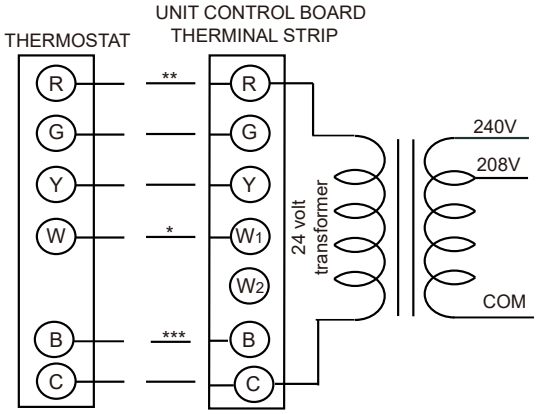

Fig. 6-1 Typical Field Control Wiring Diagram

*** B wire be used with heat pump system only.
** Minimum wire size of 18 AWG wire should be used for all field installed 24 volt wire.
* Only required on units with supplemental electric heat.

⚠ CAUTION

Label all wire prior to disconnection when servicing controls. Wiring errors can cause improper and dangerous operation. Verify proper operation after servicing.

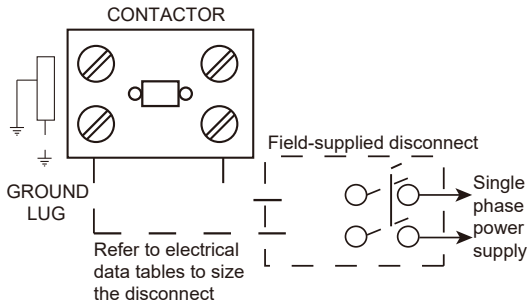

Fig. 6-2 Typical Field Power Wiring Diagram

Table 6-1: 13.4 SEER Heat Pump W/Without Electric Heat

Size (Tons)	Volt	Compressors		OD Fan Motors	ID Fan Motors	Heater Circuit (without units)						Heater Fan Speed		
		RLA	LRA	FLA	FLA	Model	KW	Stages	Amps	MCA (Amps)	Max Fuse Breaker Size(Amps)	Low	Middle	High
24(2.0)	208/230-1-60	10.0	34.8	0.61	2.0	None	-	-	None	15.1	25			
						EHK-05J	3.8/5	1	18.1/20.8	23/26	25/30	●	●	●
						EHK-08J	5.6/7.5	1	27.1/31.3	34/40	35/40	×	●	●
						EHK-10J	7.5/10	1	36.1/41.7	46/53	50/60	×	●	●
36(3.0)	208/230-1-60	16.0	72	1.0	3.2	None	-	-	None	24.2	40			
						EHK-05J	3.8/5	1	18.1/20.8	23/26	25/30	●	●	●
						EHK-08J	5.6/7.5	1	27.1/31.3	34/40	35/40	●	●	●
						EHK-10J	7.5/10	1	36.1/41.7	46/53	50/60	×	●	●
						EHK-15J	11.3/15	2	54.2/62.5	68/79	70/80	×	●	●
48(4.0)	208/230-1-60	23.0	108	1.9	4.0	None	-	-	None	35.1	50			
						EHK-05J	3.8/5	1	18.1/20.8	23/26	25/30	●	●	●
						EHK-08J	5.6/7.5	1	27.1/31.3	34/40	35/40	●	●	●
						EHK-10J	7.5/10	1	36.1/41.7	46/53	50/60	●	●	●
						EHK-15J	11.3/15	2	54.2/62.5	68/79	70/80	×	●	●
						EHK-20J	15/20	2	72.2/83.3	91/105	100/110	×	×	●
60(5.0)	208/230-1-60	26.0	127.9	1.9	5.8	None	-	-	None	38.4	60			
						EHK-05J	3.8/5	1	18.1/20.8	23/26	25/30	●	●	●
						EHK-08J	5.6/7.5	1	27.1/31.3	34/40	35/40	●	●	●
						EHK-10J	7.5/10	1	36.1/41.7	46/53	50/60	●	●	●
						EHK-15J	11.3/15	2	54.2/62.5	68/79	70/80	×	●	●
						EHK-20J	15/2	2	72.2/83.3	91/105	100/110	×	×	●

Table 6-2: 13.4 SEER Physical Data

Component	Models			
Nominal Tonnage	2.0	3.0	4.0	5.0
Volt	208/230-1-60	208/230-1-60	208/230-1-60	208/230-1-60
ARI COOLING PERFORMANCE				
ARI net capacity (Btu)	22800	34000	46500	57000
EER	10.6	10.6	10.6	10.6
SEER	13.4	13.4	13.4	13.4
Nominal CFM	800	1100	1600	1900
System power (kW)	2.15	3.21	4.39	5.38
Refrigerant type	R410a	R410a	R410a	R410a
Refrigerant charge (lb-oz)	6-6	7-15	9-4	11-14
ARI HEATING PERFORMANCE				
47 ℉ Capacity Rating (Btu)	22800	34200	48000	57000
System power (kW)	1.98	2.90	4.12	4.70
17 ℉ Capacity Rating (Btu)	11000	17000	27000	31000
System power (kW)	1.55	2.41	3.60	4.13
HSPF	6.7	6.7	6.7	6.7
DIMENSIONS (Inches)				
Length	50-11/16	50-11/16	51-9/16	51-9/16
Width	35-1/16	35-1/16	44-13/16	44-13/16
Height	46-13/16	46-13/16	51-7/16	51-7/16
OPERATING WT. (lbs)	392	408	531	562
COMPRESSORS				
Type	Rotary	Rotary	Scroll	Scroll
Quantity	1	1	1	1
CONDENSER COIL DATA				
Face area (Sq. Ft)	14.11	14.11	20.17	20.17
Rows	2+2	2+3	2+2	3+3
Fins per inch	17	17	17	17
Tube diameter	9/32	9/32	9/32	9/32
Circuitry type	interlaced	interlaced	interlaced	interlaced
EVAPORATOR COIL DATA				
Face area (Sq. Ft)	3.96	3.96	6.1	6.1
Rows	4	4	4	4
Fins per inch	17	17	17	17
Tube diameter	9/32	9/32	9/32	9/32
Circuitry type	interlaced	interlaced	interlaced	interlaced
Refrigerant control	Orifice	Orifice	Orifice	Orifice
CONDENSER FAN DATA				
Fan diameter (inch)	23-5/8	23-5/8	26-3/8	26-3/8
Type	Prop	Prop	Prop	Prop
Drive type	Direct	Direct	Direct	Direct
No. speeds	1	1	1	1
Number of motors	1	1	1	1
Motor HP each	1/12（60W）	1/6（110W）	1/3（290W）	1/3（290W）
RPM	880	840	1070	1070
Nominal total CFM	2200	2770	5100	5000
DIRECT DRIVE EVAP FAN DATA				
Quantity	1	1	1	1
Fan Size (Inch)	10×10	10×10	11×10-5/8	11×10-5/8
Type	Centrifugal	Centrifugal	Centrifugal	Centrifugal
No. speeds	1	1	1	1
Motor HP each	1/5（150W）	1/2（375W）	3/4（600W）	3/4（560W）

* The above Table data for reference only.

7 AIRFLOW PERFORMANCE

Airflow performance data is based on cooling performance with a coil and no filter in place. Use this performance table for appropriate unit size, external static applied to unit and allow operation within the minimum and maximum limits shown in table below for both cooling and electric heat operation.

7.1 Airflow Performance Data

Table 7-1

Model Number	Motor Speed		External Static Pressure-Inches W.C.[kPa]								
			0[0]	0.1[.02]	0.2[.05]	0.3[.07]	0.4[.10]	0.5[.12]	0.6[.15]	0.7[.17]	0.8[.20]
24	Low-Factory	SCFM	/	860	767	677	593	/	/	/	/
		Watts	/	1.0	1.0	1.0	1.0	/	/	/	/
		Amps	/	229	225	222	218	/	/	/	/
	Middle	SCFM	/	/	/	900	819	736	629	/	/
		Watts	/	/	/	1.4	1.4	1.3	1.3	/	/
		Amps	/	/	/	314	309	303	298	/	/
	High	SCFM	/	/	/	/	/	868	761	653	600
		Watts	/	/	/	/	/	1.7	1.7	1.7	1.7
		Amps	/	/	/	/	/	384	376	370	365
36	Low (Tap2)	SCFM	1170	1107	1042	984	926	867	/	/	/
		Watts	1.6	1.6	1.7	1.7	1.8	1.8	/	/	/
		Amps	176	182	188	194	200	206	/	/	/
	Middle (Tap3)-Factory	SCFM	1339	1284	1224	1168	1119	1065	1014	961	900
		Watts	2.2	2.2	2.3	2.3	2.4	2.4	2.5	2.5	2.6
		Amps	254	260	266	272	279	286	294	300	305
	High (Tap4)	SCFM	/	1385	1328	1274	1226	1178	1128	1079	1031
		Watts	/	2.6	2.7	2.7	2.8	2.9	2.9	3.0	3.0
		Amps	/	315	322	328	335	342	350	357	364
48	Low-Factory	SCFM	/	/	/	1897	1804	1715	1605	1511	1403
		Watts	/	/	/	3.0	2.9	2.8	2.7	2.6	2.5
		Amps	/	/	/	685	663	643	615	582	557
	Middle	SCFM	/	/	/	/	1904	1801	1689	1557	1432
		Watts	/	/	/	/	3.2	3.1	3.0	2.9	2.8
		Amps	/	/	/	/	728	702	673	643	611
	High	SCFM	/	/	/	/	/	1873	1757	1621	1500
		Watts	/	/	/	/	/	3.4	3.3	3.2	3.0
		Amps	/	/	/	/	/	771	743	712	676
60	Low (Tap3)	SCFM	1784	1732	1675	1610	1548	/	/	/	/
		Watts	2.6	2.7	2.7	2.8	2.9	/	/	/	/
		Amps	312	321	329	337	347	/	/	/	/
	Middle (Tap4)-Factory	SCFM	2046	1996	1953	1900	1844	1790	1738	1676	1520
		Watts	3.7	3.8	3.9	3.9	4.0	4.1	4.2	4.3	4.6
		Amps	459	471	481	492	503	514	527	538	577
	High (Tap5)	SCFM	/	2227	2185	2142	2094	2042	1991	1938	1761
		Watts	/	5.1	5.2	5.2	5.3	5.4	5.5	5.6	5.7
		Amps	/	646	658	670	683	695	709	724	735

- The air distribution system has the greatest effect on airflow. The duct system is totally controlled by the contractor. For this reason, the contractor should use only industry-recognized procedures.
- Heat pump systems require a specified airflow. Each ton of cooling requires between 350 and 450 cubic feet of air per minute (CFM), or 400 CFM nominally.
- Duct design and construction should be carefully done. System performance can be lowered dramatically through bad planning or workmanship.
- Air supply diffusers must be selected and located carefully. They must be sized and positoined to deliver treated air along the perimerter of the space. If they are too small for their intended airflow, they become noisy. If they are not located properly, they cause drafts. Reture air grilles must be properly sized to carry air back to the blower. If they are too small, they also cause noise.
- The installers should balance the air distribution system to ensure proper quiet airflow to all rooms in the home. This ensures a comfortable living space.
- An air velocity meter or airflow hood can give a reading of system CFM.
- When installation, installer should select the air speed according to the actual setting static pressure. Please refer to the Table 7-1 AIRFLOW PERFORMANCE DATA.

8 SYSTEM OPERATION

8.1 Compressor Crankcase Heater (Optional)

Refrigerant migration during the off cycle can result in a noisy start up. Add a crankcase heater to minimize refrigeration migration, and to help eliminate any start up noise or bearing “wash out”.

All heaters are located on the lower half of the compressor shell. Its purpose is to drive refrigerant from the compressor shell during long off cycles, thus preventing damage to the compressor during start-up.

At initial start-up or after extended shutdown periods, make sure the heater is energized for at least 12 hours before the compressor is started. (Disconnect switch on and wall thermostat off.)

The crankcase heater will start up or shut down according to the following logic:

The crankcase heater will start up when the compressor is off and T4<41°F.

The crankcase heater will shut down when T4 ≥ 44.6 °F.

In any condition, the crankcase heater will shut down when the compressor is on

8.2 Protection

8.2.1 Protection for HP system If sensors (T3&T4)

become open-circuit or short-circuit, the compressor , outdoor fan motor and reversing valve circuit will shut down.

Discharge temperature protection:

If discharge temp. is > 275°F(4T\5T) ,the compressor will shut down, If discharge temp. is < 194°F(4T\5T) , the compressor will resume operation.

If discharge temp. is > 239°F(2T\3T),the compressor will shut down, If discharge temp. is < 167°F(2T\3T), the compressor will resume operation.

High pressure protection

If high pressure is ＞638PSIG,the compressor and the outdoor fan motor will stop running.

If high pressure is ＜464PSIG,the compressor and the outdoor fan motor will resume running(3 minutes delay necessary).

Outdoor coil temperature protection (T3)

If T3 > 147.2°F, compressor is de-energized

If T3 < 125.6°F, compressor is energized.

Low pressure protection

When low pressure is ＜21PSIG,the compressor and the outdoor fan motor will stop running.

When low pressure is ＞44PSIG,the compressor and the outdoor fan motor will resume running(3 minutes delay necessary).In stand-by status, if low pressure protection was detected, the compressor will not start.

If protection cycles occur four times within 30 minutes, the compressor and outdoor fan will shut down. In this condition, the system needs to power on once more in order to keep on working.

T4 function:

i. If 50°F ≤ T4 < 125°F, unit can operate in cooling
ii. If 5°F ≤ T4 < 77°F, unit can operate in heating

When T4 is < 5 °F, the compressor will stop. If the electrical heater kit is installed in the indoor unit, the outdoor unit will send the operation signal to the indoor unit.When T4 is > 10.4 °F, the compressor will restart .

8.3 Defrost Mode* (For HP System Only)

Manual defrost mode

To manually cycle the defrost mode, set switch SW3-1 to the “ON” position (See Fig 7). The system will engage a defrost cycle, and automatically exit defrost mode once the **Shut-down conditions of defrost mode** described below are met.

Caution: Once the manual defrost mode is finished, please set switch SW3-1 back to “OFF”.

Start-up conditions of defrost mode:

When SW3-3 switch is set to “ON”(See Fig 7), the system will perform a defrost cycle in any of the following conditions:

1. If the compressor is operating and T3 is < 30.2 °F, the system will perform a defrost cycle every 30 minutes of operation.

2.When T3 is < 28.4 °F and the compressor is operating for the first time after being connected power.

3. When T3 is < 28.4 °F and The system has been in standby for two hours .

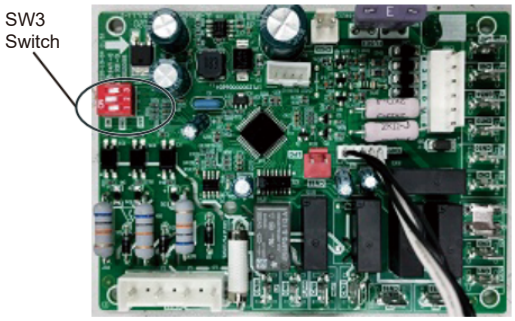

Fig.7 SW3 Switch Location in the PCB Board
(For reference only)

SW3 (ON / OFF)	SW3-1	ON	MANUAL DEFROST
		OFF	AUTOMATIC DEFROST
	SW3-2	ON	INTELLIGENT DEFROST
		OFF	NORMAL DEFROST
	SW3-3	ON	DEFROSTING CYCLE:60MIN
		OFF	DEFROSTING CYCLE:30MIN

When SW3-3 switch is set to “OFF”(See in Fig 7), the system will perform a defrost cycle in any of the following conditions:
1. If the compressor is operating and T3 is < 30.2 °F, the system will perform a defrost cycle every 60 minutes of operation.
2.When T3 is < 28.4 °F and the compressor is operating for the first time after being connected power.
3. When T3 is < 28.4 °F and the system has been in standby for two hours .

Shut-down conditions of defrost mode:

The mode will shut down in any of the following conditions:

1. The defrosted time lasting for 10 minutes;
2. T3 is ≥ 77 °F when T4 ≥ 28.4 °F;
3. Compressor stop operating;
4. T3 is ≥ 77 °F last for 60s when T4 < 28.4 °F.

8.4 Thermostat Signals

Table 8-1: Thermostat Signals

Signal	State	Board Function
G	ON	Blower instant ON
	OFF	Blower 90 sec. delay OFF
G & W1	ON	Blower instant ON Heater bank 1 elec.onstant ON
	OFF	Heater bank 1 elec.instant OFF Blower 90 sec. delay OFF
G & W & W2	ON	Blower instant ON Heater 1 instant ON Heater 2 instant ON
	OFF	Blower 90 sec. delay OFF Heater 1 instant OFF Heater 2 instant OFF
G & Y	ON	Blower instant ON Compressor and outdoor fan instant ON
	OFF	Compressor and outdoor fan instant OFF Blower fan delay 90 sec. OFF
G & B & Y	ON	Blower instant ON Compressor and outdoor fan instant ON 4-way valve instant ON
	OFF	Compressor and outdoor fan instant OFF Blower fan delay 90 sec. OFF 4-way valve instant OFF
G & B & Y & W1	ON	Blower instant ON Compressor and outdoor fan instant ON 4-way valve instant ON Heater 1 instant ON
	OFF	Blower fan delay 90 sec. OFF Compressor and outdoor fan instant OFF 4-way valve instant OFF Heater 1 instant OFF
G & B & Y & W1 & W2	ON	Blower instant ON Compressor and outdoor fan instant ON 4-way valve instant ON Heater 1 instant ON Heater 2 instant ON
	OFF	Blower fan delay 90 sec. OFF Compressor and outdoor fan instant OFF 4-way valve instant OFF Heater 1 instant OFF Heater 2 instant OFF

9 OPERATION CHECK-UP

- **Cooling Startup**

  1. Turn thermostat to OFF and turn power to ON
  2. Turn ON thermostat and set as high as possible
  3. Turn Fan switch ON and indoor blower should run
  4. Turn fan switch to AUTO, system switch to COOL and thermostat tem perature setting below room temperature.
     Unit should run in COOLING mode.

- **Heating Startup**

  After normal cooling run

  1. Turn thermostat switch to HEAT. After unit stops, wait about 5 minutes.
  2. Turn thermostat setting above room temperature. Unit should run in HEATING mode.

  After unit has run for a while, check the following:

  1. Are fans running properly?
  2. Is compressor running correctly?
  3. Check refrigerant charge.
  4. Check duct connection for leaks.
  5. Check for tubing and sheet metal rattles.

(See Wiring Diagram for electric connection detail.)

10 TROUBLE SHOOTING

⚠ WARNING

Component trouble shooting requires opening control box with power on. Use extreme care while working on this condition. Check nameplate and this instruction when making wire connections.

NOTE

When the outdoor temperature is between 50°F and 67°F, the compressor can only run for cooling within a short time, otherwise it may cause damage to compressor.

ILLUSTRATION FOR COVERING SIDE OPENINGS FOR DOWNFLOW APPLICATION

FOAM STICKED METHOD:

1. Use two covers from bottom openings to cover the side openings.
2. Use four sticking foam tapes provided in accessory bag and stick tapes on covers. See FIG.1 and 2.
3. Place the covers on supply and return openings and use screws and washers provided to hold covers. See FIG.3.
4. Use silicon sealant to seal four sides of covers to prevent water from coming into equipment.

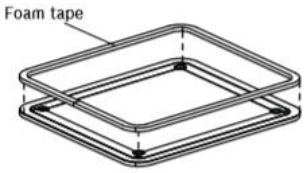

FIG.1

FIG.2

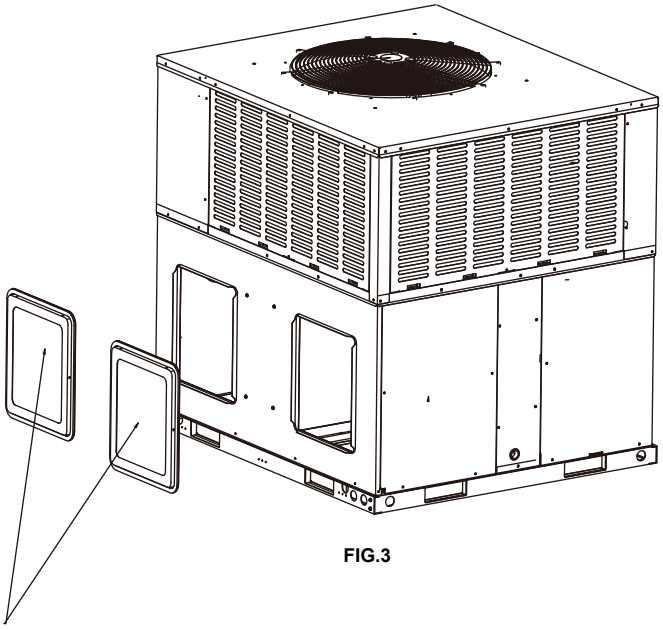

FIG.3

Return/Supply duct cover
(attach with 4 screws)

16127700000752 V.B

此页不做菲林，仅核对使用

印刷技术要求

材质	封面封底内页双胶纸80g
规格	A4规格
颜色	黑白
其他	

设计更改记录表（仅做说明用，不做菲林）

版本升级	更改人	更改日期	更改主要内容	涉及更改页面（印刷页码）
A-B	李志方	2022. 11. 28	增加产品宣称环境温度使用范围	P15